38 mm (1-1/2") Pump Maximum Flow Rate: 354 lpm (94 gpm)

P4 PLASTIC

DIMENSIONAL DRAWINGS

P4 Plastic

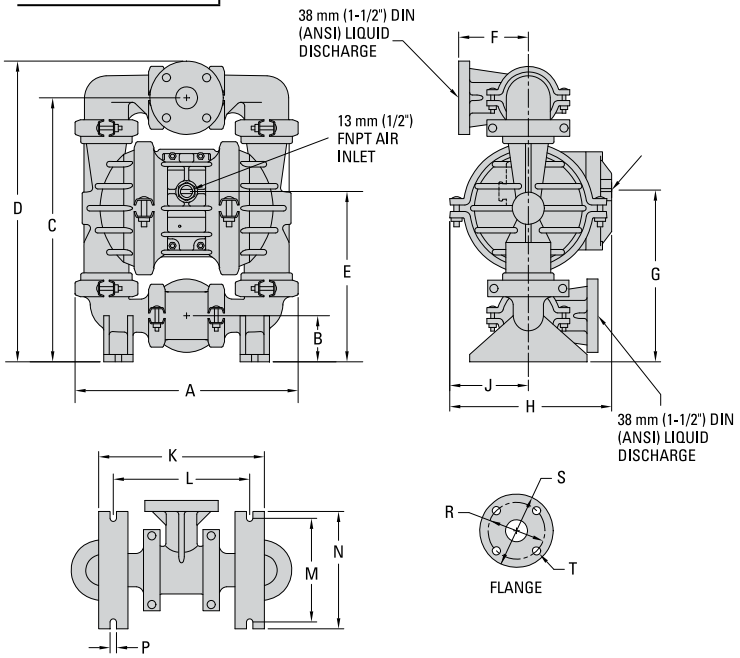

DIMENSIONS

ITEM	METRIC (mm)	STANDARD (inch)
A	394	15.5
B	79	3.1
C	465	18.3
D	528	20.8
E	297	11.7
F	122	4.8
G	297	11.7
H	285	11.2
J	142	5.6
K	287	11.3
L	236	9.3
M	180	7.1
N	206	8.1
P	13	0.5
	DIN (mm)	ANSI (inch)
R	99ø	3.9ø
S	127ø	5.0ø

PUMP DATA

Specifications:

Ship Weight...Polypropylene 16.8 kg (37 lb)
PVDF 21.3 kg (47 lb)
PTFE PFA 23.9 kg (52 lb)

Air Inlet..... 13 mm (1/2")
Liquid Inlet.....38 mm (1-1/2")
Liquid Outlet.....38 mm (1-1/2")

WILDEN®

22069 Van Buren Street
Grand Terrace, CA 92313-5607 USA

O: +1 (909) 422-1730 F: +1 (909) 783-3440
www.wildenpump.com

PSG® a DOVER company
psgdover.com

PERFORMANCE

P4 PLASTIC RUBBER-FITTED

Max. Flow Rate..... 348 lpm (92 gpm)
Max. Inlet Pressure ..... 8.6 bar (125 psig)
Max. Size Solids..... 4.8 mm (3/16")
Max. Suction Lift ..... 4.9 m Dry (16.0')
7.9 m Wet (26.0')

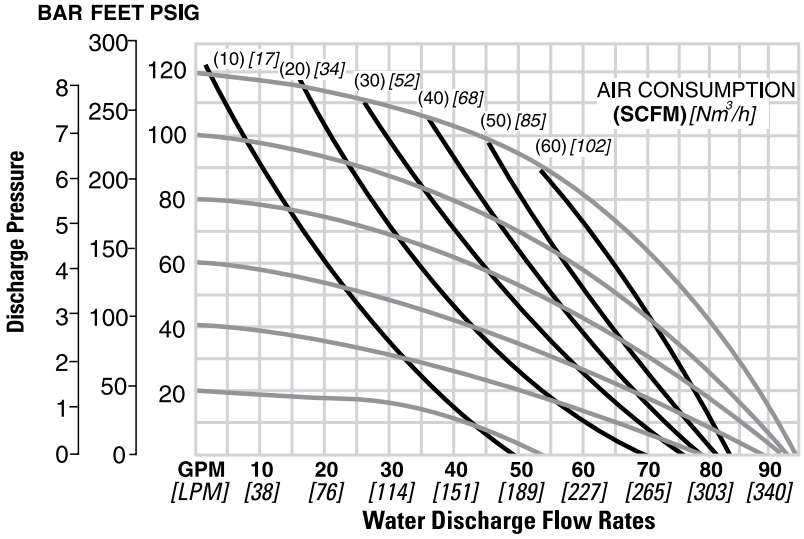

Click button to view Performance Curve → RUBBER-FITTED | TPE-FITTED

P4 PLASTIC REDUCED-STROKE PTFE-FITTED

Max. Flow Rate..... 261 lpm (69 gpm)
Max. Inlet Pressure ..... 8.6 bar (125 psig)
Max. Size Solids..... 4.8 mm (3/16")
Max. Suction Lift ..... 3.1 m Dry (10.0')
7.5 m Wet (24.5')

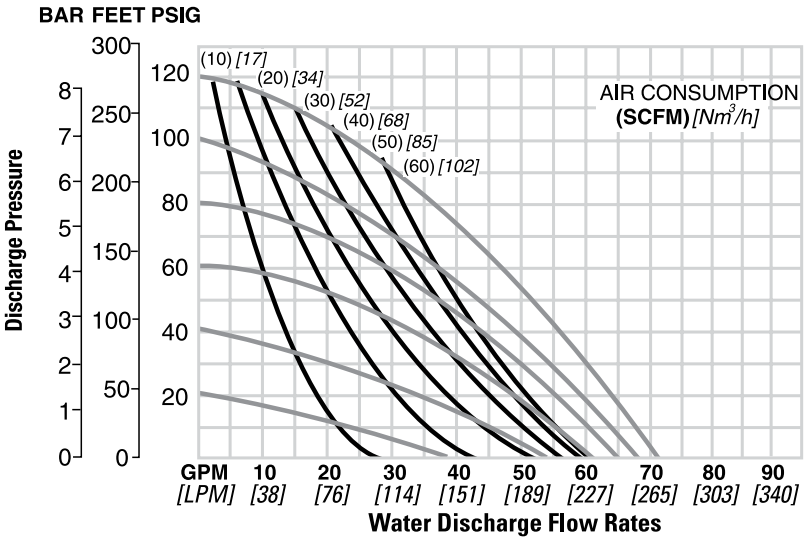

Click button to view Performance Curve → REDUCED-STROKE PTFE-FITTED | FULL-STROKE PTFE-FITTED

WILDEN®
22069 Van Buren Street
Grand Terrace, CA 92313-5607 USA
O: +1 (909) 422-1730 F: +1 (909) 783-3440
www.wildenpump.com